DHI-ARD323-W2(868)

Dahua Wireless Door Detector （Black）

- Signal strength detection;
- Low battery alarm;
- temperature monitoring;
- Frequency hopping function and two-way communication technology ensure communication stability;
- Cloud update and automatic recovery from update failure.

Series Overview

The Wireless Door Detector leverages the magneto-switch principle of reed tubes to quickly recognize and send messages through the hub to you when the doors and windows of a building are being broken into. The detector also sends notifications when it detects an intrusion. Easy to install, it can be attached to doors and windows that need protection.

Technical Specification

Function

Indicator Light	1 × green alarm indicator
Button	1 × power button
Remote Update	Cloud update
Low Battery Detection	Yes
Tamper	Yes
Measuring Range (Temperature)	–15 °C to +65 °C (+5 °F to +149 °F) (indoor)

Technical

Sensor	Reed switch
Movement Distance	< 40 mm (1.57")
Test Mode	Yes
Scenario	Non-metal doors

Wireless

Carrier Frequency	868.0 MHz–868.6 MHz
Transmitter Power (EIRP)	Limit 25 mW
Communication Mechanism	Two-way
Communication Distance	Up to 1,200 m (3,937.01 ft) in an open space
Encryption Mode	AES128
Frequency Hopping	Yes

General

Power Supply	CR123A battery
Power Supply Type	Type C
Battery Life	4 years (The external input type is NO) 2 years (The external input type is NC or Pulse)
Low Battery Threshold	2.7V
Battery Restore Threshold	2.8V
Power Consumption	Max. 125 mW
Operating Temperature	–10 °C to +55 °C (+14 °F to +131 °F) (indoor)
Operating Humidity	10%–90% (RH)
Product Dimensions	100.2 mm × 20.8 mm × 20.3 mm (3.94" × 0.82" × 0.80") (L × W × H)
Net Weight	70 g (0.15 lb)
Gross Weight	115 g (0.25 lb)
Installation	Bracket mount
Casing Material	PC + ABS
Certifications	CE EN 50131-1:2006+A1:2009+A2:2017+A3:2020 EN 50131-6:2017 EN 50131-5-3:2017 EN 50131-2-6:2008 Security Grade 2 Environmental Class II
Anti-corrosion Level	Basic Protection
Storage Temperature	–10 °C to +55 °C (+14 °F to +131 °F) (indoor)

Storage Humidity	10%–90% (RH)
Packaging Dimensions	135.0 mm × 98.5 mm × 27.8 mm (5.31" × 3.88" × 1.09") (L × W × H)

Ordering Information

Type	Model	Description
Wireless Door Detector	DHI-ARD323-W2(868)	Dahua Wireless Door Detector（Black）

Installation

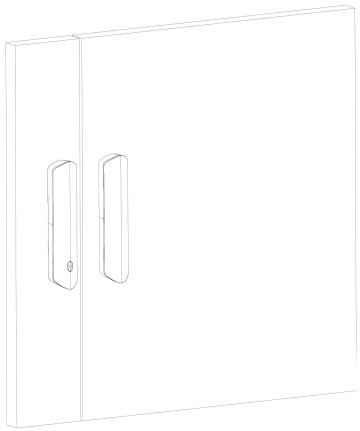

Dimensions (mm[inch])

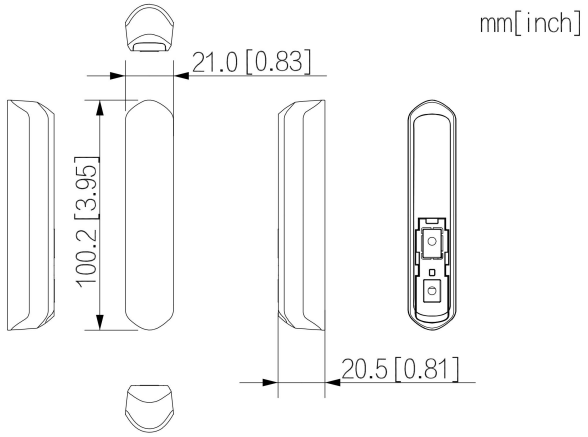

Application

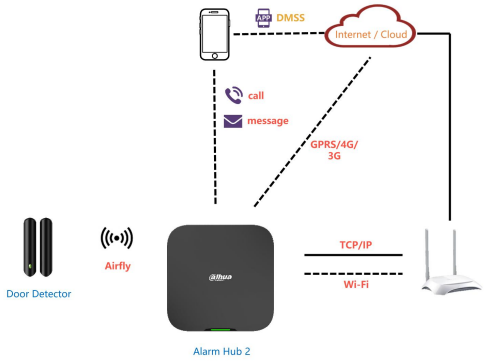

©2025 Dahua. All rights reserved. Design and specifications are subject to change without notice.
Pictures in the document are for reference only, and the actual product shall prevail.